Appendix 1e

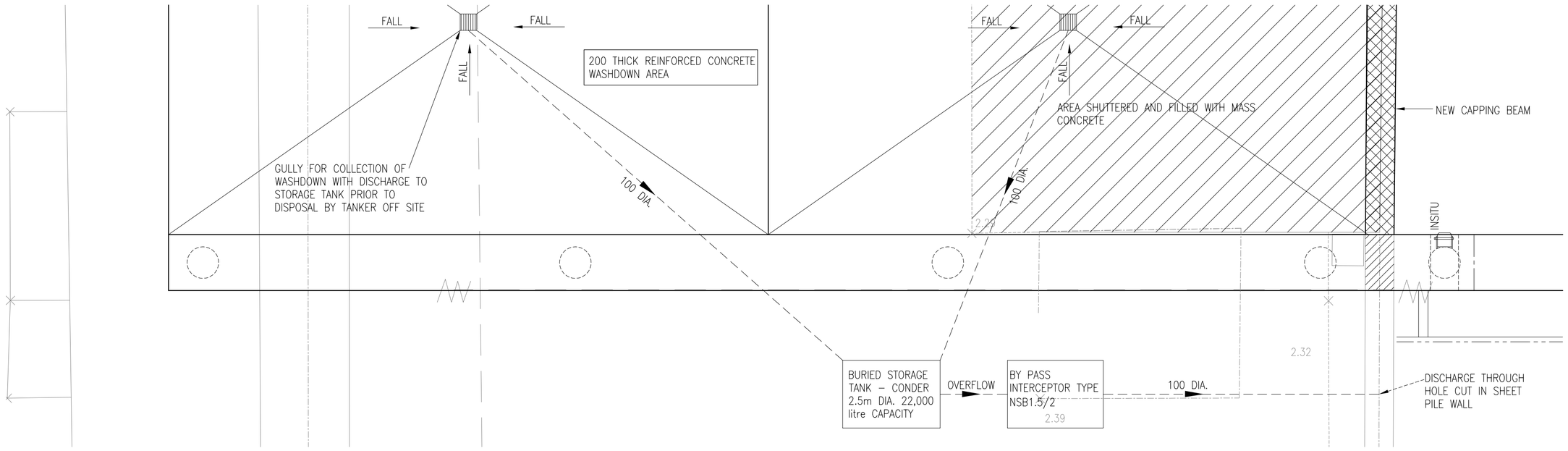

WASHDOWN AREA DRAINAGE
SCALE 1:50

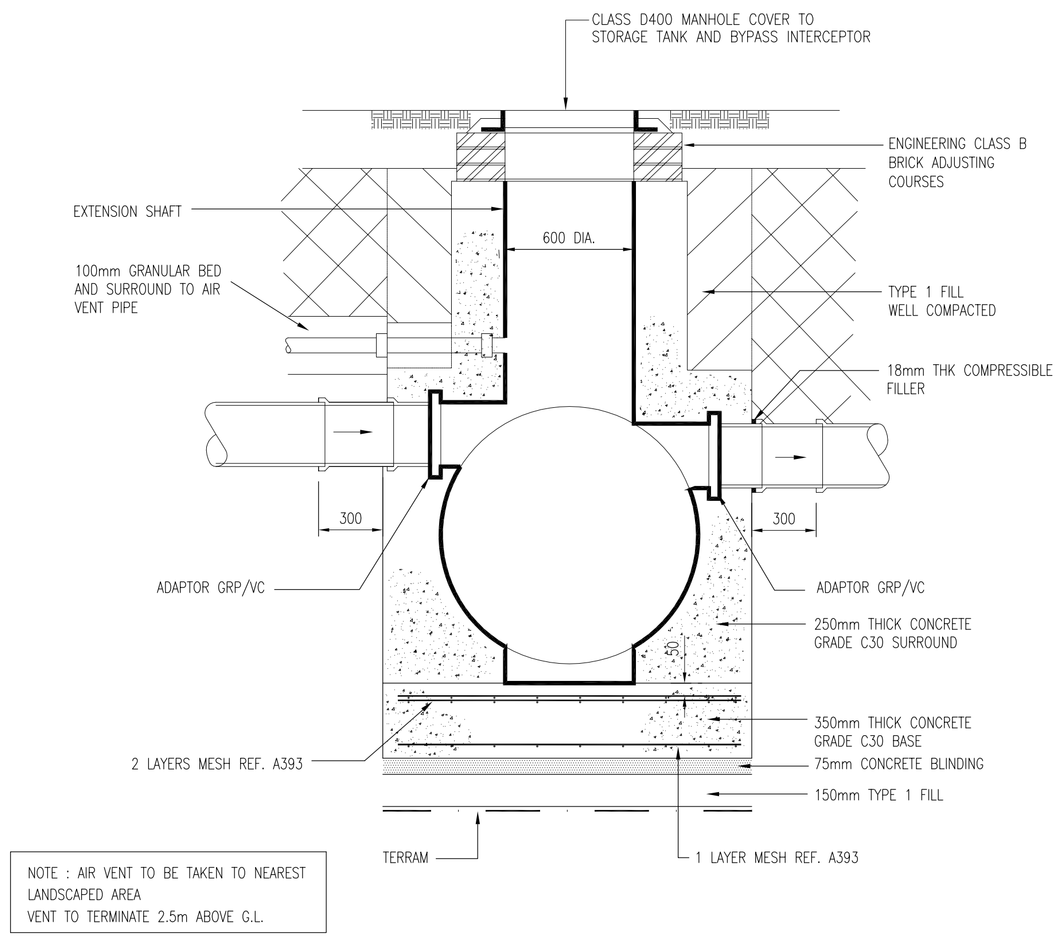

BYPASS INTERCEPTOR
(TYPE NSB1.5/2)

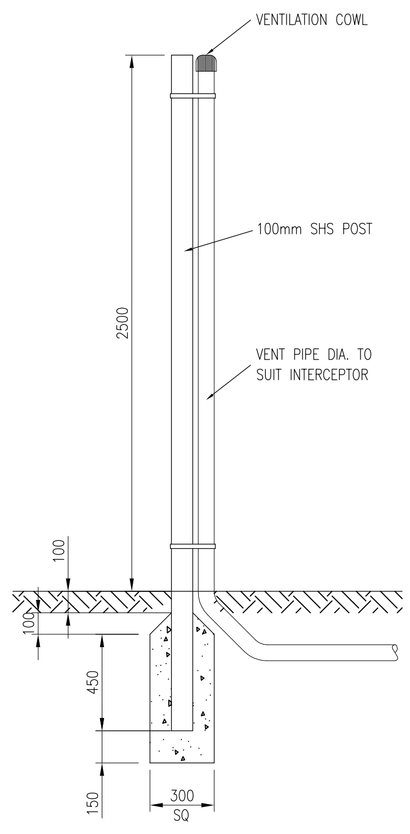

SECTION THROUGH VENT PIPE

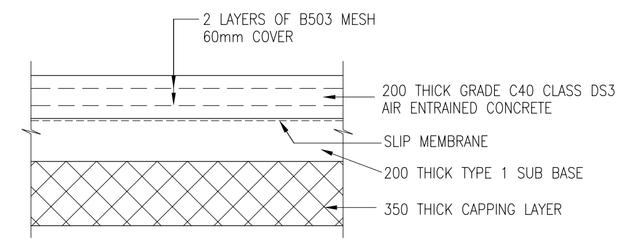

WASHDOWN AREA CONSTRUCTION

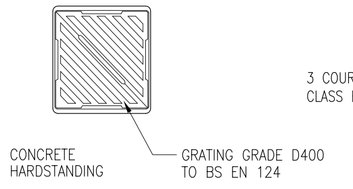

PLAN

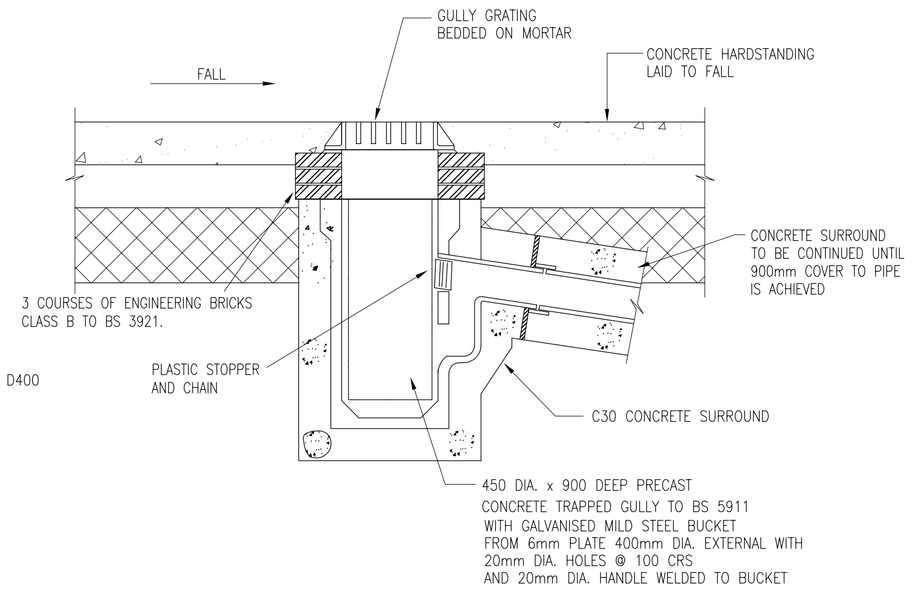

ROAD GULLY

NOTES:

1. THIS DRAWING IS COPYRIGHT AND SHOULD NOT BE REPRODUCED WITHOUT APPROVAL.
2. THIS DRAWING TO BE READ IN CONJUNCTION WITH THE ARCHITECTS DRAWINGS. ANY DISCREPANCIES ARE TO BE BROUGHT TO THE ATTENTION OF BOTH PARTIES IMMEDIATELY.
3. ANY DIMENSIONS/LEVELS INDICATED 'ref.' REFER TO ASSUMED/EXISTING DIMENSIONS WHICH ARE TO BE SITE CHECKED PRIOR TO THE COMMENCEMENT OF ANY WORK.
4. ALL DRAINAGE TO BE CONSTRUCTED IN ACCORDANCE WITH BS 8301.

PRELIMINARY

Version	Amendment	Revised by and date	Checked by and date	Approved by and date
P2	PRELIMINARY ISSUE	BH/07.13	BH/07.13	BH/07.13
P1	PRELIMINARY ISSUE	BH/05.13	BH/05.13	BH/05.13

ORIGINAL DRAWING SIZE – A1
CAD REF. 06-768-209-xx.dwg
X-REFS:

11. HDL
HAMILL DAVIES LIMITED
Consulting Civil and Structural Engineers

Client: PREMIER MARINAS LTD
Project: SWANWICK MARINA
Drawing Title: PROPOSED HOIST DOCK GENERAL DETAILS
Purpose: PRELIMINARY
Drawn: HDL
Designed:
Scale: 1:20 @A1
Issuing Office: SWANMORE
Telephone: 01489 893 596
Drawing Number: 13-2093-204
Version: P2